PARTS LIST

HT237D

CONTENTS

1. MAIN BODY ..... 1 ~ 4
2. ENGINE ..... 5 ~ 8
3. CARBURETOR, RECOIL STARTER ..... 9 ~ 10
4. ACCESSORIES ..... 11 ~ 12

2018. 06.

MARUYAMA

P/N 524392-4

www.foreroagro.com

1. HT237D
MAIN BODY

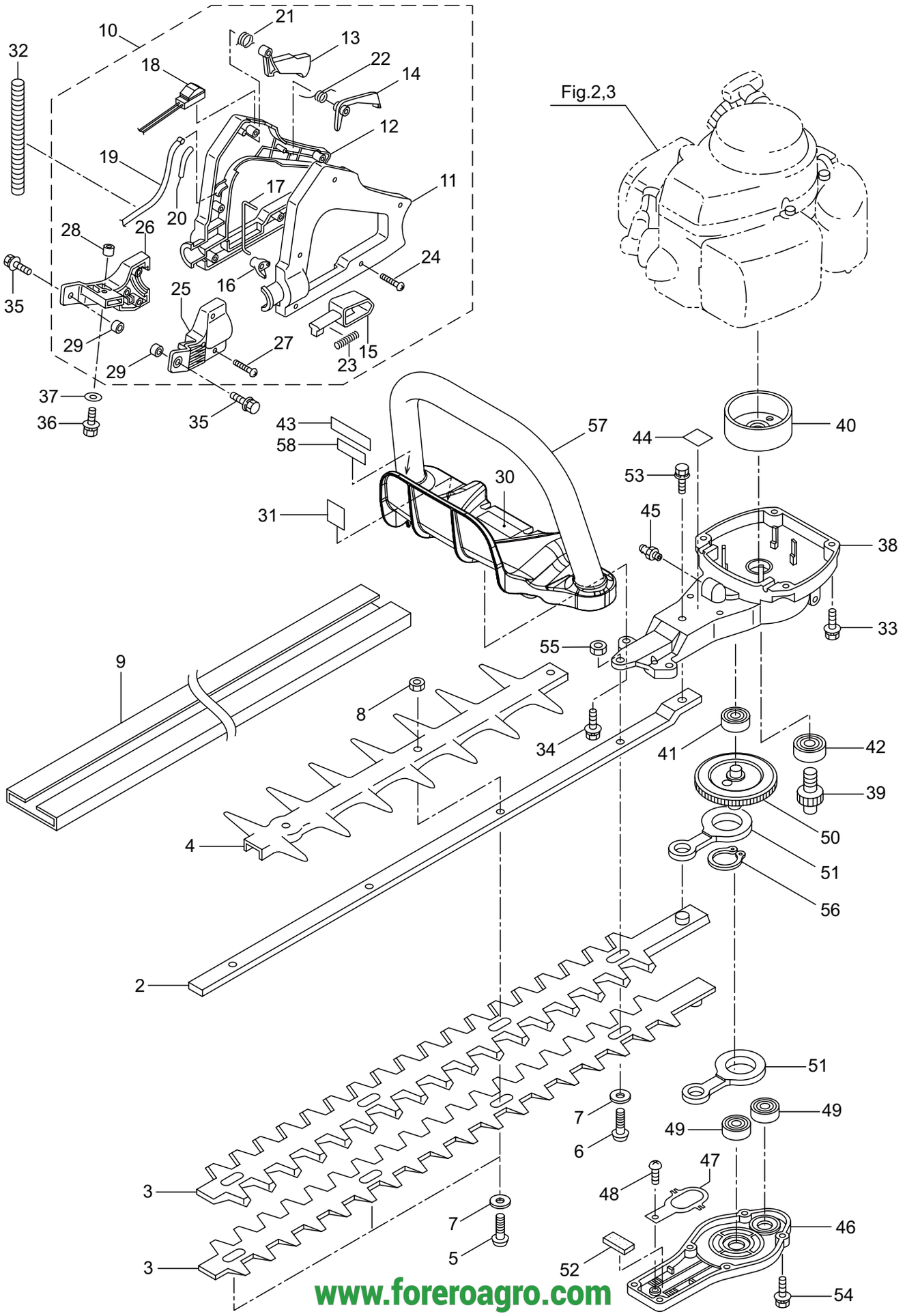

www.foreroagro.com

Ref. No.	Part No.	Part Name	Q'ty	Remarks
1-1	362426	HT237D	1	
1-2	271226	Guide Plate	1	
1-3	270682	Blade	2	
1-4	274877	Blade Guard	1	
1-5	991914	Screw	3	
1-6	271229	Screw	1	
1-7	991913	Washer	4	
1-8	991941	U-Nut	3	M6
1-9	217677	Cover of Blade	1	
1-10	271396	Rear Handle Ass'y	1	Incl.11-29
1-11	271278	Rear Handle (L)	1	
1-12	271279	Rear Handle (R)	1	
1-13	271280	Lever,Throttle	1	
1-14	271281	Stop Lever	1	
1-15	271282	Lock Lever	1	
1-16	271283	Lock Lever Stopper	1	
1-17	271284	Rod	1	
1-18	271285	Switch	1	
1-19	271398	Cable Comp	1	
1-20	271287	Spacer	1	
1-21	271288	Spring	1	
1-22	271289	Spring	1	
1-23	270400	Spring	1	
1-24	271276	Screw	5	
1-25	271274	Handle Stay (L)	1	
1-26	271275	Handle Stay (R)	1	
1-27	271276	Screw	3	
1-28	270424	Spacer	1	
1-29	271277	Spacer	2	
1-30	270566	Label	1	
1-31	287394	Label	1	109dB
1-32	271221	Tube	1	
1-33	271908	Screw	4	
1-34	277400	Screw	2	
1-35	271909	Screw	2	
1-36	271911	Screw	1	
1-37	270843	Washer	1	25x6xt1.6
1-38	271222	Upper Case	1	
1-39	271410	Pinion	1	
1-40	270021	Drum	1	
1-41	270423	Bearing	1	
1-42	580767	Bearing	1	#6001 2RS
1-43	266959	Label	1	Caution
1-44	266960	Label	1	
1-45	991937	Grease Nipple	1	M6

www.foreroagro.com

1. HT237D
MAIN BODY

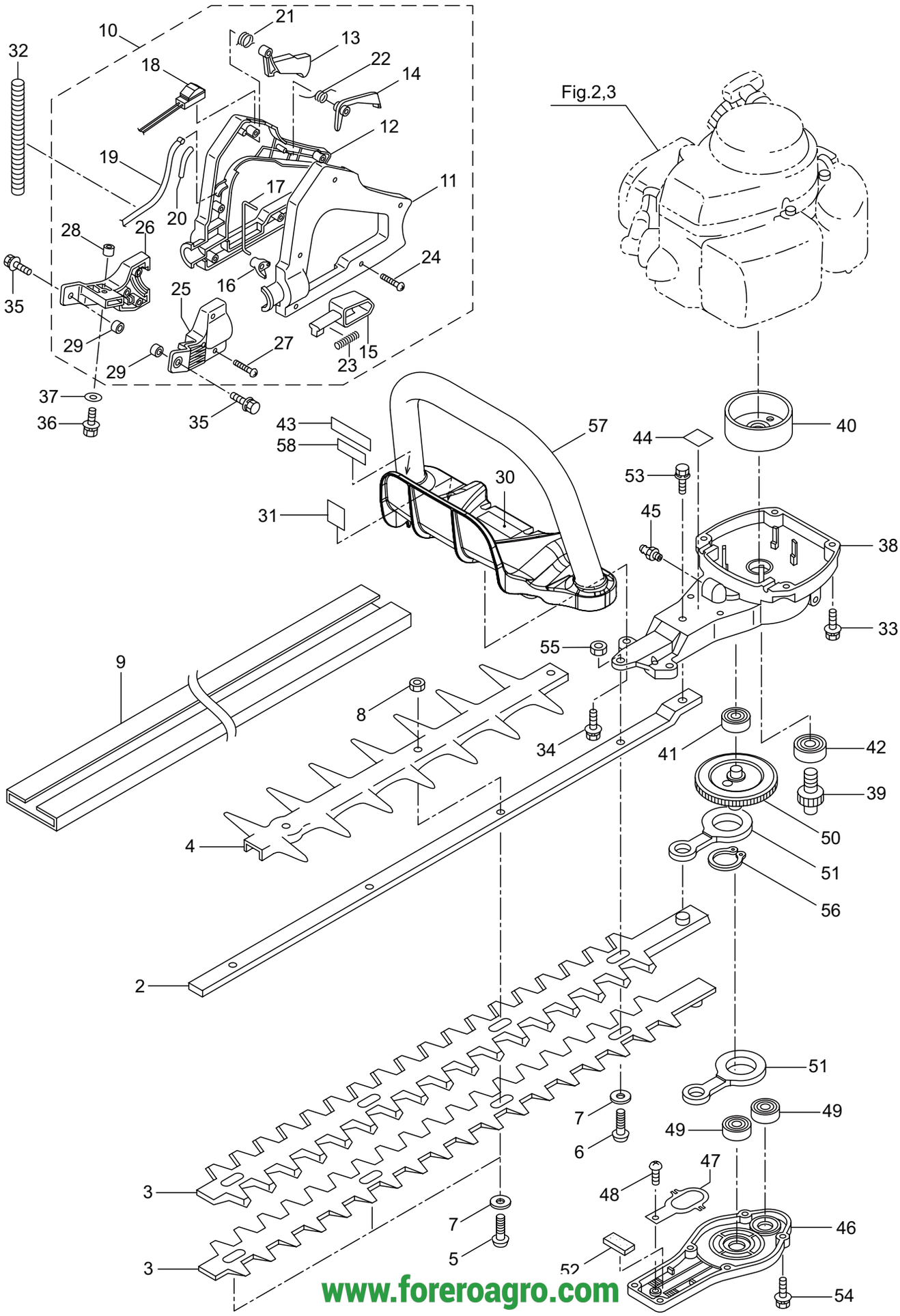

www.foreroagro.com

Ref. No.	Part No.	Part Name	Q'ty	Remarks
1-46	271223	Lower Case	1	
1-47	271224	Plate	1	
1-48	991924	Screw	1	M3x5
1-49	270423	Bearing	2	
1-50	270552	Crank Comp	1	
1-51	271225	Rod Ass'y	2	
1-52	271227	Felt	1	
1-53	271895	Screw	1	
1-54	271910	Screw	6	
1-55	991941	U-Nut	1	M6
1-56	580777	Snap Ring	1	#26
1-57	278303	Front Handle Ass'y	1	
1-58	266957	Label	1	

www.foreroagro.com

2. HT237D
ENGINE

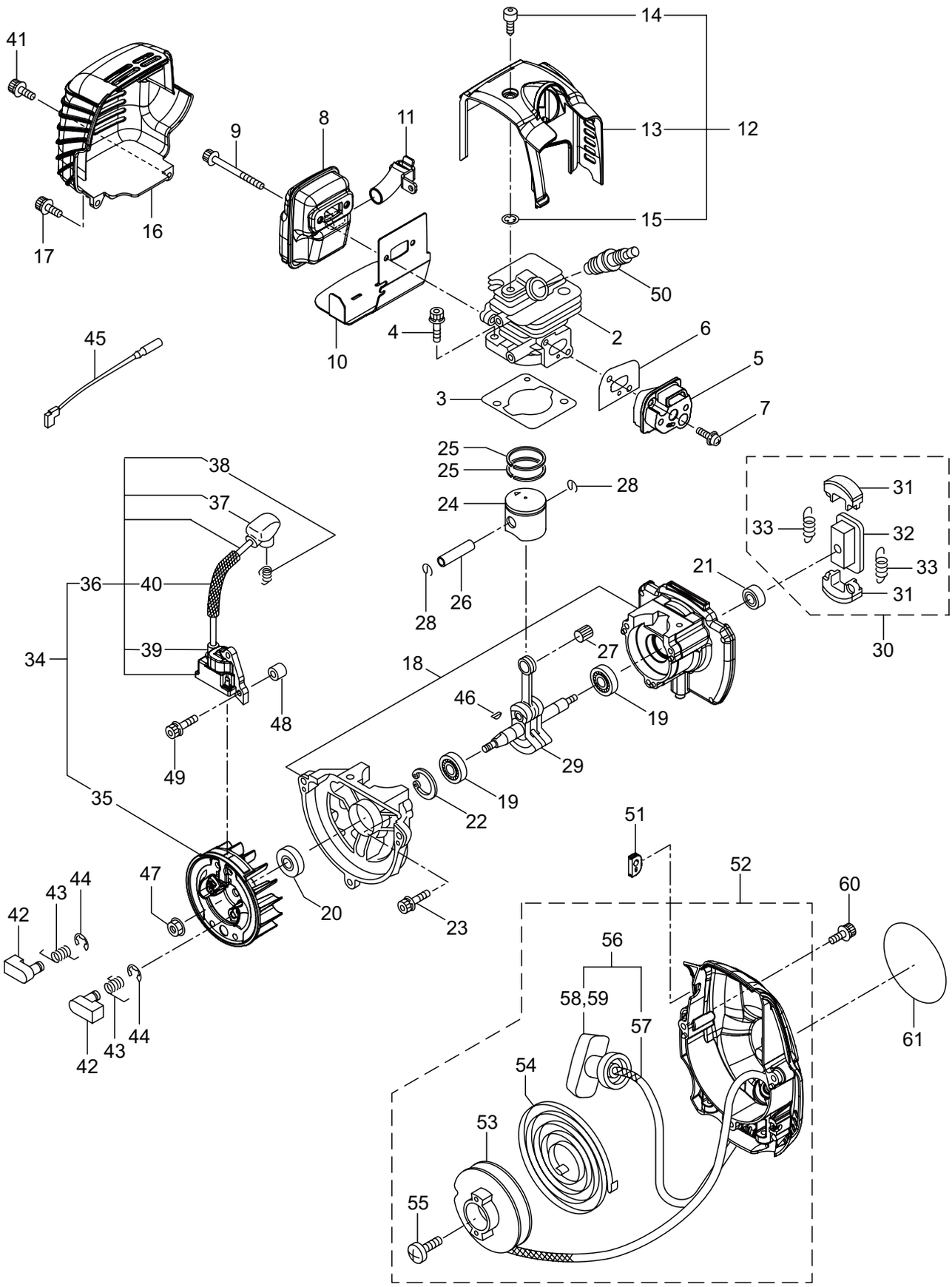

www.foreroagro.com

Ref. No.	Part No.	Part Name	Q'ty	Remarks
2-1	875089	Engine	1	HE232/01
2-2	278641	Cylinder	1	
2-3	289643	Gasket	1	
2-4	267290	Cap Screw	2	M5x20
2-5	272744	Insulator	1	New gasket required
2-6	267049	Gasket	1	
2-7	265924	Cap Screw	2	M5x25
2-8	278263	Muffler Comp	1	
2-9	266402	Cap Screw	2	M5x55
2-10	278273	Gasket	1	
2-11	278264	Tail Pipe Comp	1	
2-12	278288	Cylinder Cover Ass'y	1	Incl.13-15
2-13	277793	Cylinder Cover	1	
2-14	286399	Knob	1	M5
2-15	286270	Washer	1	M5
2-16	278210	Muffler Cover Comp	1	
2-17	261607	Cap Screw	1	M5x16
2-18	278208	Crankcase	1	
2-19	261181	Bearing	2	#6000C3
2-20	262712	Oil Seal	1	TC10267
2-21	262713	Oil Seal	1	TC10207
2-22	054676	Snap Ring	1	#26
2-23	261246	Cap Screw	3	M5x25
2-24	272204	Piston	1	
2-25	264891	Piston Ring	2	(2)required
2-26	261036	Piston Pin	1	
2-27	288520	Bearing, Needle	1	
2-28	261576	Clip,Piston	2	
2-29	283155	Shaft Comp	1	
2-30	280404	Clutch Ass'y	1	Incl.31-33
2-31	280568	Clutch Shoe	2	(2)required
2-32	280569	Clutch Boss	1	
2-33	280570	Spring	2	(2)required
2-34	278161	Magneto Ass'y	1	Incl.35-41
2-35	278176	Rotor/Fan	1	
2-36	278293	Ignition Coil Ass'y	1	Incl.37-41
2-37	282292	Plug Boot	1	
2-38	261075	Connector	1	
2-39	261072	Cap	1	
2-40	280080	Insulator	1	
2-41	267191	Cap Screw	1	M5x16
2-42	280936	Ratchet	2	
2-43	285552	Spring	2	
2-44	020299	E-Ring	2	#4
2-45	267492	Lead	1	130L

www.foreroagro.com

2. HT237D
ENGINE

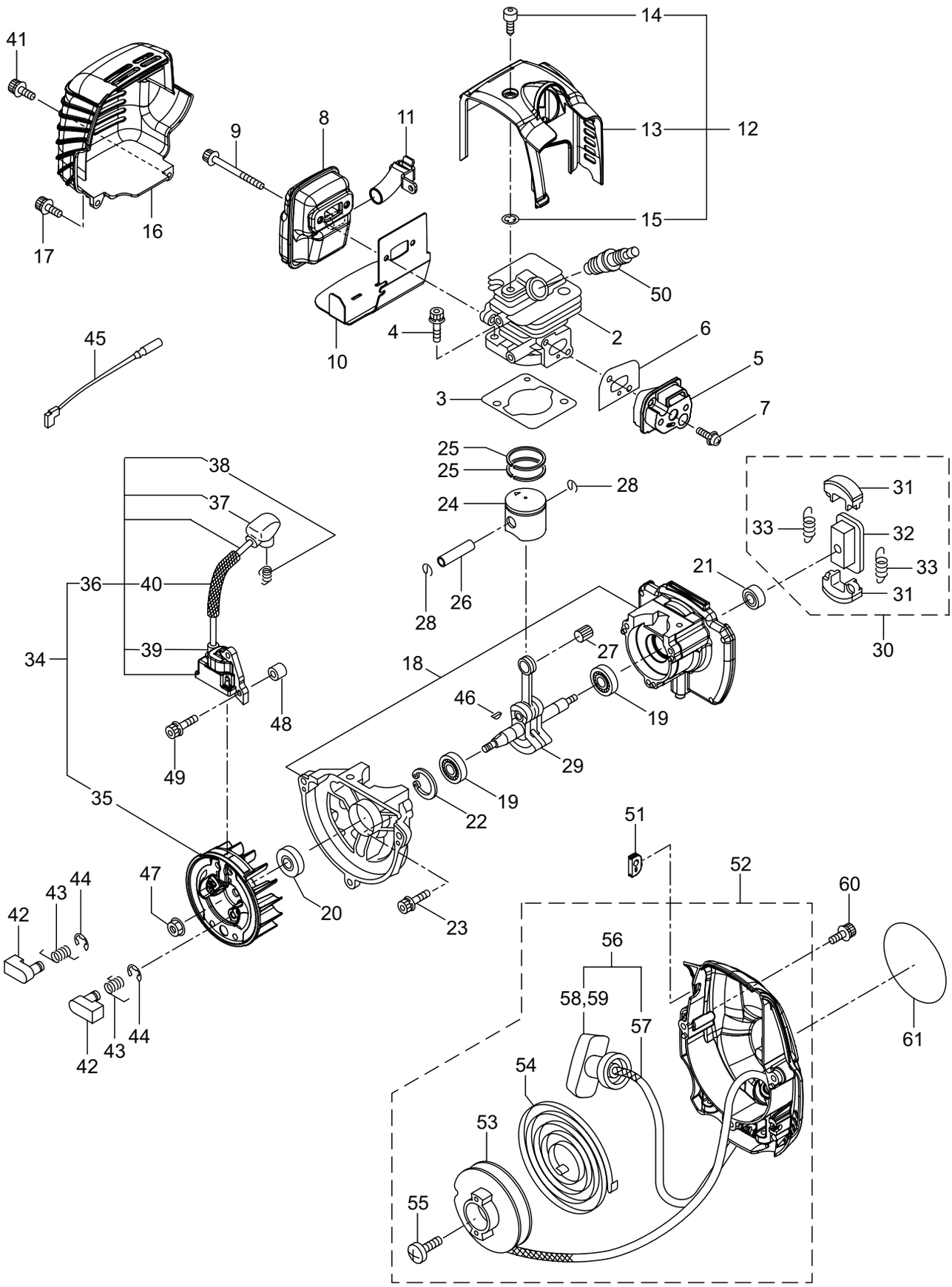

www.foreroagro.com

Ref. No.	Part No.	Part Name	Q'ty	Remarks
2-46	261076	Woodruff Key	1	3x10
2-47	261077	Nut,Rotor	1	M6
2-48	280381	Spacer	2	
2-49	279850	Cap Screw	2	M4x25
2-50	288264	Spark Plug	1	BPMR8Y
2-51	278294	Grommet	1	
2-52	278207	Starter Ass'y	1	Incl.53-59
2-53	278693	Pulley	1	
2-54	280931	Spiral Spring	1	
2-55	262922	Screw	1	
2-56	283291	Rope Ass'y	1	Incl.57-59
2-57	283292	Starter Rope	1	
2-58	261725	Starter Grip	1	
2-59	283293	Rope Stopper	1	
2-60	267290	Cap Screw	3	M5x20
2-61	278300	Label	1	

www.foreroagro.com

3. HT237D
CARBURETOR, FUEL TANK

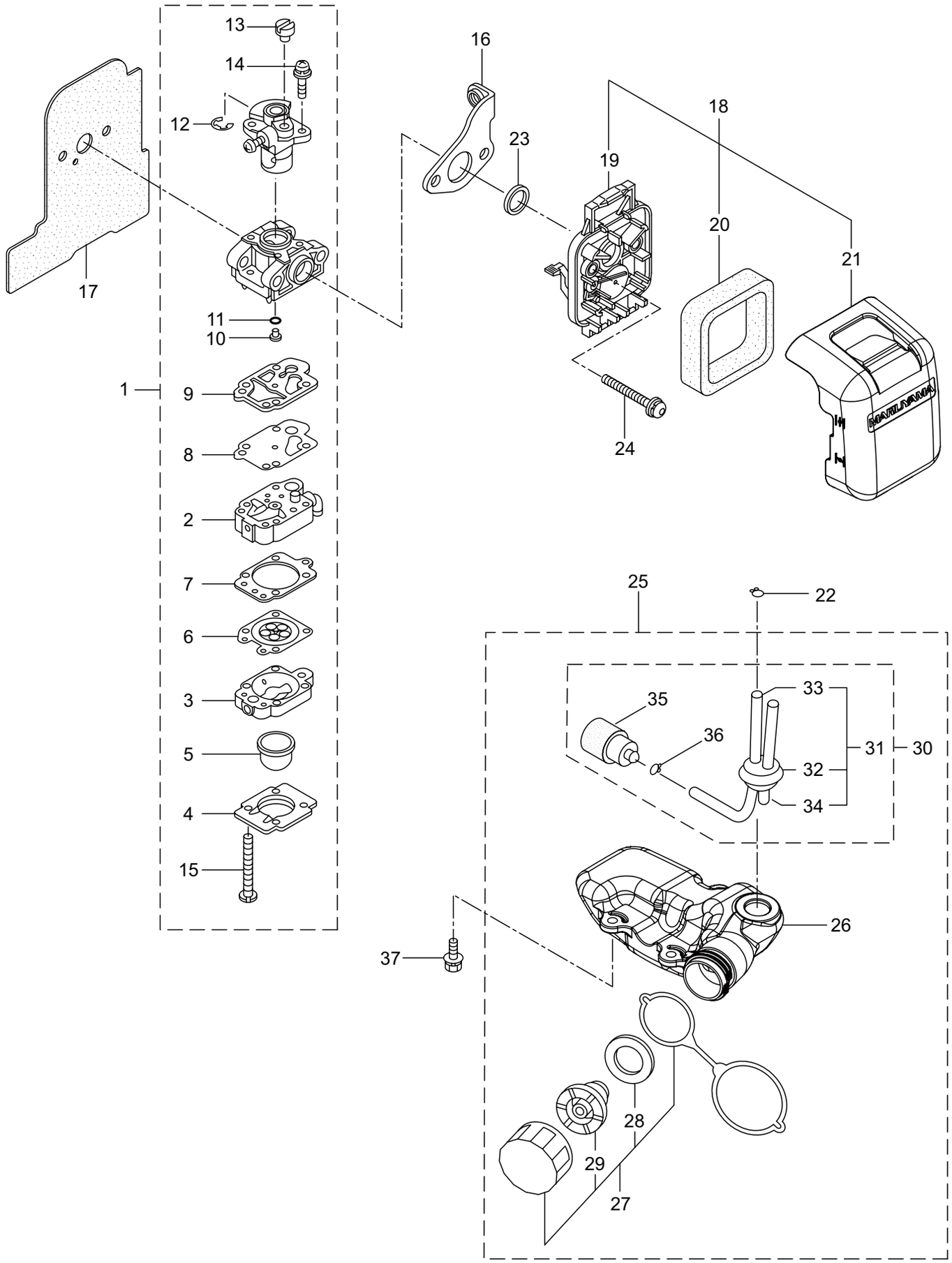

www.foreroagro.com

Ref. No.	Part No.	Part Name	Q'ty	Remarks
3-1	278297	Carburetor Ass'y	1	Incl.2-15
3-2	268499	Pump Body	1	
3-3	262991	Purge Body	1	
3-4	262992	Cover Plate	1	
3-5	261874	Primer Bulb	1	
3-6	283905	Diaphragm, Meterring	1	
3-7	262993	Gasket	1	
3-8	262994	Diaphragm,Fuel Pump	1	
3-9	282576	Gasket	1	
3-10	289396	Main Jet	1	
3-11	261871	O-Ring	1	
3-12	261876	E-Ring	1	
3-13	261658	Swivel	1	
3-14	264682	Screw	2	
3-15	262996	Screw	4	
3-16	268535	Stay	1	
3-17	278750	Gasket	1	
3-18	278090	Cleaner Ass'y	1	Incl.19-21
3-19	265576	Housing	1	
3-20	264695	Filter	1	
3-21	278760	Cleaner Cover	1	
3-22	261117	Clip	1	
3-23	268963	Gasket	1	19.4x14.8xt3.5
3-24	280102	Screw	2	M5x65
3-25	278209	Fuel Tank Ass'y	1	Incl.26-36
3-26	277791	Fuel Tank	1	
3-27	283438	Tank Cap Ass'y	1	Incl.28,29
3-28	283727	Gasket	1	
3-29	283764	Breather Ass'y	1	
3-30	265752	Fuel Pipe Pick-up Ass'y	1	Incl.31-36
3-31	264031	Fuel Pipe Ass'y	1	Incl.32-34
3-32	261115	Grommet	1	
3-33	261690	Fuel Pipe	1	160L
3-34	263038	Return Pipe	1	3x6x85L
3-35	264653	Filter Ass'y	1	
3-36	261117	Clip	1	
3-37	269690	Cap Screw	3	M5x18

www.foreroagro.com

4. HT237D
ACCESSORIES

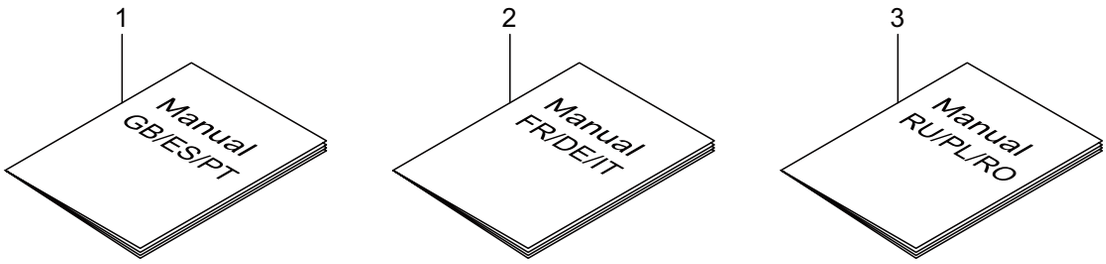

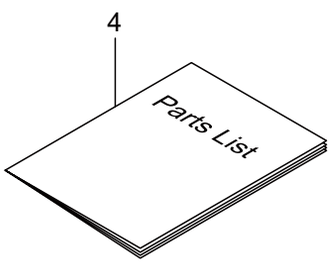

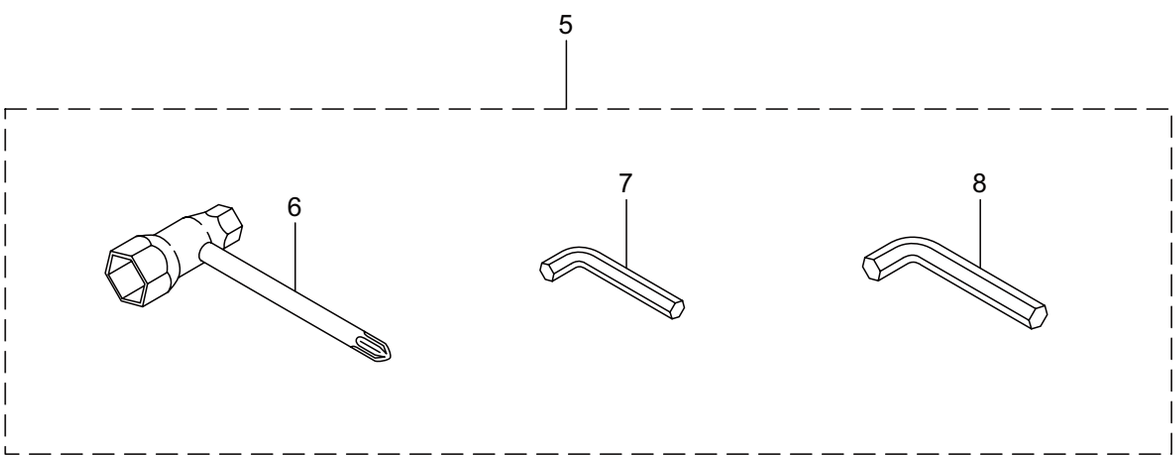

Ref. No.	Part No.	Part Name	Q'ty	Remarks
4-1	278278	Instruction Manual	1	GB/ES/PT
4-2	278279	Instruction Manual	1	FR/DE/IT
4-3	278280	Instruction Manual	1	RU/PL/RO
4-4	524392	Parts List	1	HT237D
4-5	264606	Tool Set	1	Incl.6-8
4-6	264607	Box Spanner	1	10x19x(+)
4-7	219431	Wrench	1	3mm
4-8	219432	Wrench	1	4mm

www.foreroagro.com