PARTS LIST

BC501H-RS

CONTENTS

1. MAIN BODY .....1 ~ 2
2. GEARCASE.....3 ~ 4
3. ENGINE .....5 ~ 8
4. CARBURETOR, FUEL TANK .....9 ~ 12
5. ACCESSORIES .....13 ~ 14

2018. 06.

MARUYAMA

P/N 524438-2

www.foreroagro.com

1. BC501H-RS
MAIN BODY

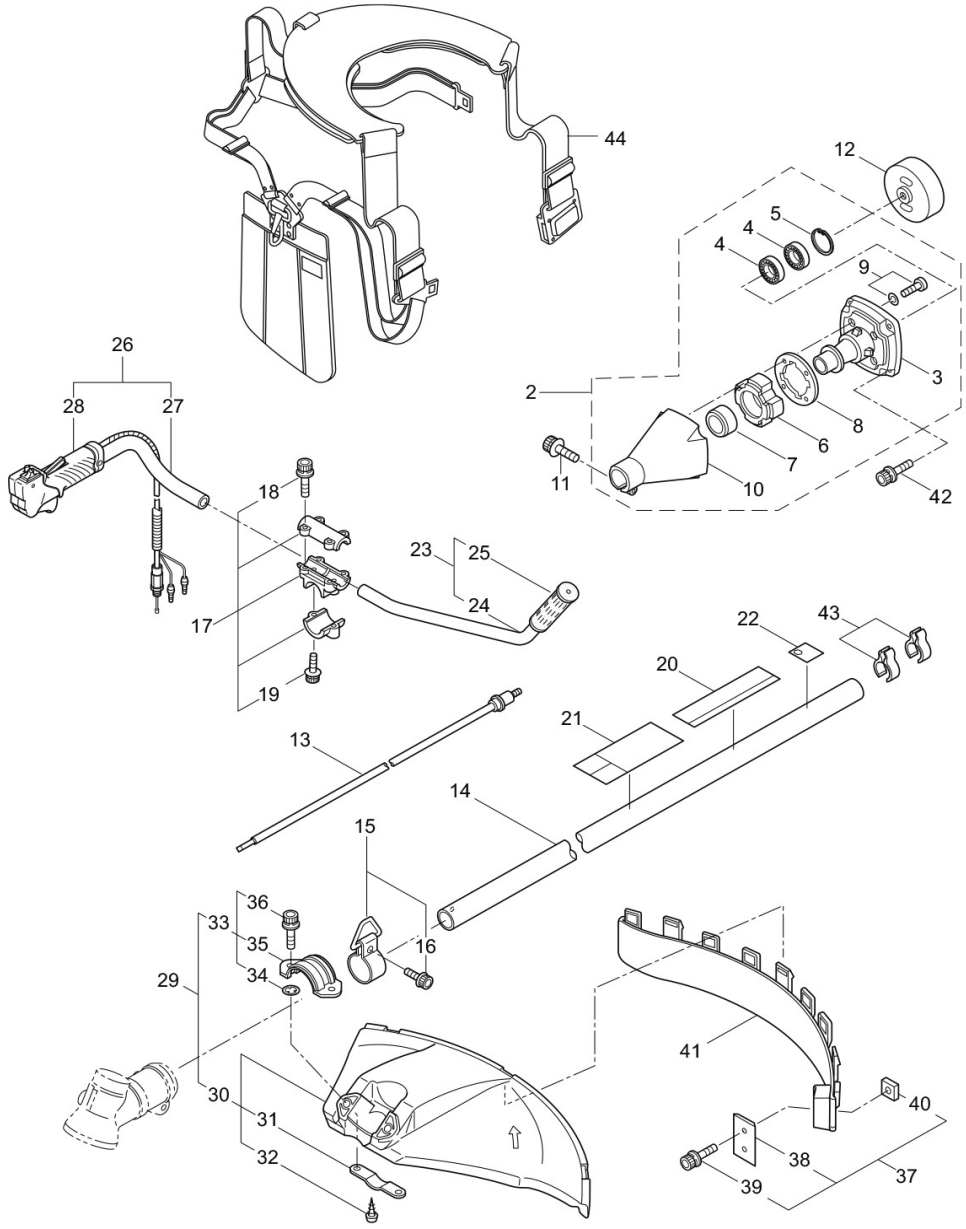

1

Status	Position	Parts Number	Parts Name	Unit Quantity	Set Unit Quantity	Remarks	Price	Maker code
	1	364707	BC501H-RS(EU01)	1				
	2	234162	CLUTCH CASE ASSY	1		Incl.3-10	2308	
	3	234143	CASE BEARING	1			862	
	4	140474	BEARING 6202 ZZ	2		#6202ZZ	160	
	5	012380	SNAP RING	1		#35	20	
	6	217045	BUFFER	1			262	
	7	217046	BUFFER	1			108	

www.foreroagro.com

Status	Position	Parts Number	Parts Name	Unit Quantity	Set Unit Quantity	Remarks	Price	Maker code
	8	217047	WASHER	1			62	
	9	092033	SCREW	4	10	M5x15	10	
	10	227728	OUTER TUBE ADAPTER	1			1000	
	11	217134	BOLT	1		M6x30	34	
	12	211203	CLUTCH DRUM	1			539	
	13	217897	DRIVE SHAFT	1			739	
	14	217900	OUTER PIPE	1			2000	
	15	231887	HANGING BRACKET ASSY	1		Incl.16	147	
	16	261762	SCREW	1		M5x14	16	
	17	231888	HANDLE BRACKET	1		Incl.18,19	670	
	18	217138	BOLT	4		M6x25	31	
	19	217134	BOLT	2		M6x30	34	
	20	239869	NAME PLATE	1		BC501H-RS	10	
	21	223188	CAUTION MARK	1			154	
	22	228207	LABEL	1			47	
	23	228398	HANDLE A ASSY	1		Incl.24,25	800	
	24	228399	HANDLE	1			462	
	25	226512	GRIP	1			185	
	26	229762	HANDLE ASSY-LEFT	1		Incl.27,28	2170	
	27	228401	HANDLE	1			308	
	28	229763	Throttle Lever Assy (229763)	1				
	29	232092	SAFETY COVER	1		Incl.30-36	693	
	30	231262	SAFETY COVER	1		Incl.31,32	616	
	31	237364	THREADED BRACKET	1			40	
	32	221580	SCREW	1	10	4x8	10	
	33	232093	BRACKET	1		Incl.34-36	154	
	34	231704	WASHER	2		6x13xt1.0	10	
	35	223179	BRACKET	1			48	
	36	220632	CAP SCREW	2		M6x30	16	
	37	231882	CUTTER ASSY	1		Incl.38-40	162	
	38	230747	CORD CUTTER	1			108	
	39	261250	CAP SCREW	1	5	M5x20	16	
	40	228325	SQUARE NUT	1			10	
	41	230748	EXTENSION	1			185	
	42	219113	CAP SCREW	4		M6x20	14	
	43	219161	WIRE GUIDE	2			31	
	44	228086	NEW LARK SHOULDER HARNESS	1			1231	

www.foreroagro.com

2. BC501H-RS
GEARCASE

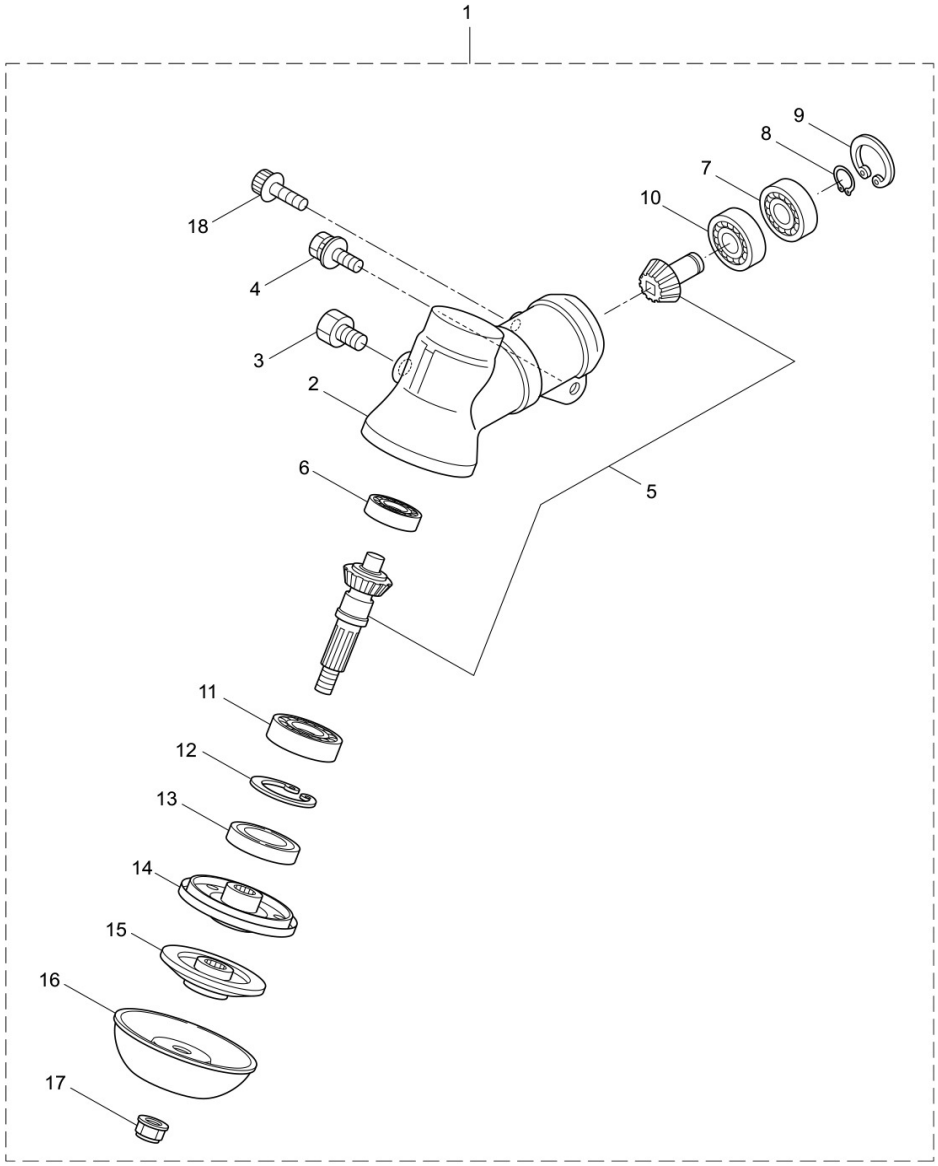

1

Status	Position	Parts Number	Parts Name	Unit Quantity	Set Unit Quantity	Remarks	Price	Maker code
	1	234835	GEAR CASE	1		Incl.2-18	5077	
	2	232833	GEAR CASE	1			1154	
	3	234109	BOLT	1	5	M8x8	10	
	4	217134	BOLT	1		M6x30	34	
	5	234349	GEAR SET	1			2000	
	6	014490	BEARING 6000	1		#6000	110	
	7	106933	BEARING 6000Z	1		#6000Z	136	

www.foreroagro.com

Status	Position	Parts Number	Parts Name	Unit Quantity	Set Unit Quantity	Remarks	Price	Maker code
	8	014210	SNAP RING	1	5	#10	10	
	9	054676	RING SNAP	1	5	#26	15	
	10	014490	BEARING 6000	1		#6000	110	
	11	012544	BEARING	1		#6202	205	
	12	012380	SNAP RING	1		#35	20	
	13	232049	OIL SEAL	1		D21355	100	
	14	232322	BRACKET A	1			867	
	15	232052	BRACKET B	1			339	
	16	230849	NUT COVER	1			200	
	17	232920	NUT	1		M10x1.25	67	
	18	217135	BOLT	1		M6x10	16	

www.foreroagro.com

3. BC501H-RS
ENGINE

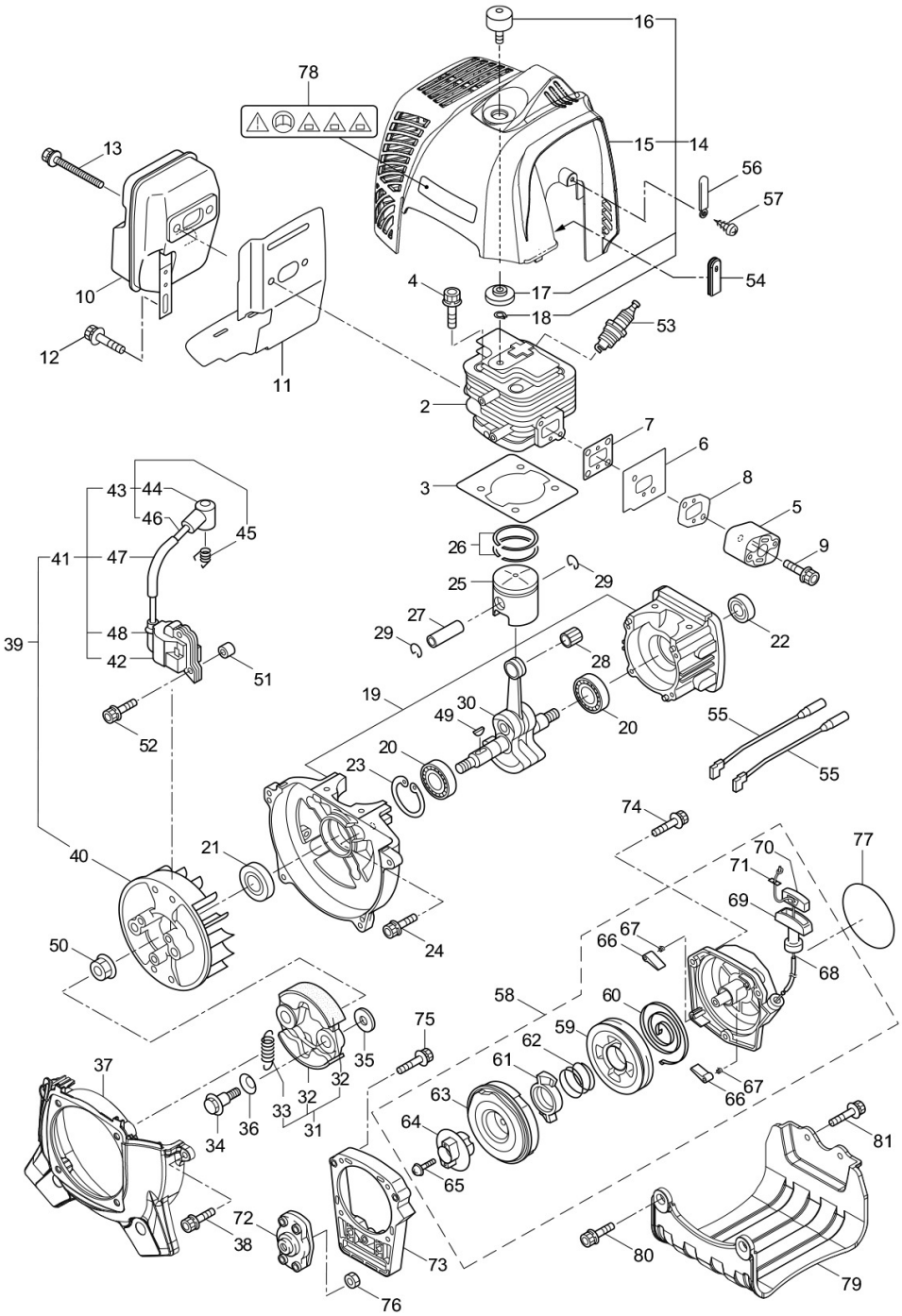

1

Status	Position	Parts Number	Parts Name	Unit Quantity	Set Unit Quantity	Remarks	Price	Maker code
	1	875118	ENGINE	1		AE500/79	10	
	2	281407	CYLINDER	1		New gasket required	4578	
	3	262546	GASKET	1	5		18	
	4	261246	CAP SCREW	4	5	M5x25	16	
	5	262548	INSULATOR ASSY	1		New gasket required	218	
	6	277806	DIVIDER	1			36	

www.foreroagro.com

Status	Position	Parts Number	Parts Name	Unit Quantity	Set Unit Quantity	Remarks	Price	Maker code
	7	262790	GASKET	1			45	
	8	277807	GASKET	1			38	
	9	265924	CAP SCREW	2	5	M5x25	23	
	10	276379	MUFFLER COMPLETE	1			556	
	11	276378	GASKET	1			176	
	12	261607	CAP SCREW	1	5	M5x16	16	
	13	262687	CAP SCREW	2		M6x65	80	
	14	276600	TOP COVER ASSY	1		Incl.15-18	889	
×	15	275316	TOP COVER	1			10	
	16	285843	KNOB BOLT	1			80	
	17	262689	SPACER	1			56	
	18	262690	SNAP RING	1		#6	12	
	19	262558	CRANK OUTER	1			2267	
	20	262658	BEARING 6202 C3	2		#6202C3	423	
	21	262660	OIL SEAL	1		TC15357	94	
	22	262565	OIL SEAL	1		ISCD15257	65	
	23	012380	SNAP RING	1		#35	20	
	24	261999	CAP SCREW	4	5	M5x40	23	
	25	281301	PISTON	1			816	
	26	264005	PISTON RING	2		(2)Required	154	
	27	262749	PISTON PIN	1			116	
	28	262659	NEEDLE BEARING KTV111414EGX01B	1		KTV111414EG01B2	249	
	29	262479	CLIP PISTON	2			16	
	30	280534	SHAFT COMPLE	1			4534	
	31	262577	CLUTCH ASSY	1		Incl.32,33	752	
	32	282624	CLUTCHSHOE	2		(2)required	420	
	33	263615	SPRING	1			116	
	34	282321	CLUTCH BOLT	2		M8x1.25	65	
	35	262683	WASHER	2	5	8x22xt1.2	14	
	36	262682	WAVE WASHER	2	5		29	
	37	275230	FAN COVER	1			516	
	38	261250	CAP SCREW	2	5	M5x20	16	
	39	267576	ROTOR ASSY	1		Incl.40-48	3809	
	40	264673	ROTOR	1			1612	
	41	267579	IGNITION COIL ASSY	1		Incl.42-48	2374	
	42	267572	COIL	1			2076	
	43	267584	SPARK PLUG CORD ASSY	1		Incl.44-46	414	
	44	261074	PLUG BOOT	1			94	
	45	261075	CONNECTOR	1			54	
	46	267585	CORD	1			25	
	47	269421	TUBE	1			29	
	48	261072	CAP	1			25	
	49	261076	WOODRUFF KEY 3X10	1	5	3x10	40	
	50	262731	NUT	1		M10	29	
	51	280381	SPACER	2	5		20	
	52	261256	BOLT	2	5	M4x25	16	
	53	262483	SPARK PLUG NGK BPMR6Y	1		NGK BPMR6Y	636	
	54	275191	GROMMET	1			49	
	55	267519	LEAD	2			65	
	56	264588	CLAMP	1	5		14	
	57	221580	SCREW	1	10	4x8	10	
	58	280838	RECOIL STARTER ASSY	1		Incl.59-71	2849	
	59	280994	PULLEY	1			232	
	60	280995	SPIRAL SPRING	1			196	
	61	280996	PAWL	1			80	
	62	280997	RETURN SPRING	1			29	
	63	280998	SPRING COMPLETE	1			112	
	64	280999	PLATE	1			218	
	65	281000	SET SCREW	1			36	
	66	281001	PULLEY	2			120	
	67	281002	RETURN SPRING	2			38	
	68	281004	STARTER ROPE	1			94	
	69	262633	STARTER KNOB	1			134	
	70	262981	CAP	1			54	
	71	281005	ROPE STOPPER	1			16	
	72	280834	STARTER PULLEY ASSY	1			247	
	73	278150	ADAPTER	1			200	
	74	284985	SCREW	3		M5x25	27	
	75	261257	CAP SCREW	4	5	M4x16	14	
	76	126990	NUT	1	5	M8	10	
	77	280842	LABEL	1		REVERSE2/MARUYAMA	49	
	78	265694	LABEL	1			63	
	79	278160	STAND	1			194	
	80	278064	BOLT	2		M5x45	30	
	81	284695	SCREW	2		M5x18	23	

www.foreroagro.com

4. BC501H-RS
CARBURETOR, FUEL TANK

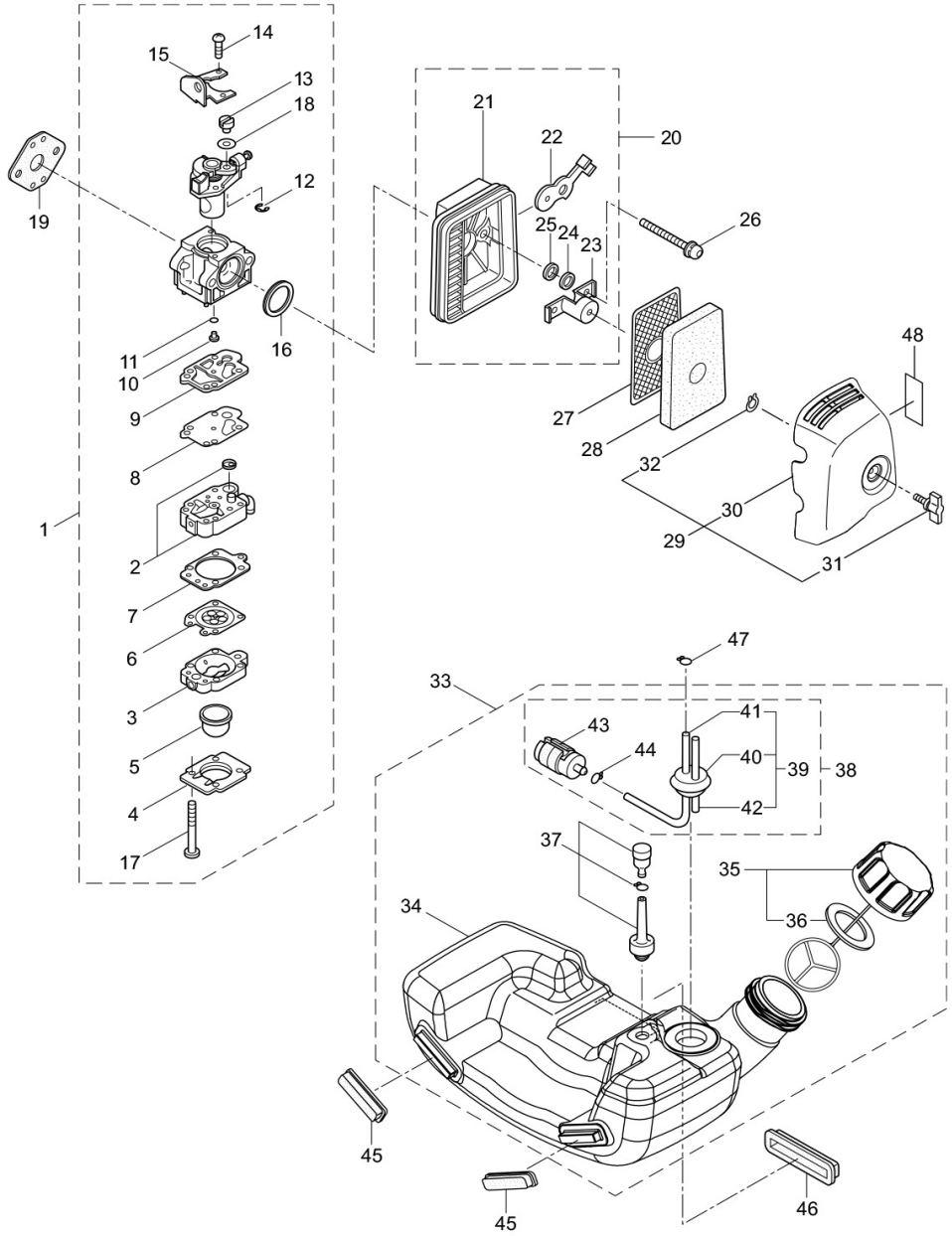

1

Status	Position	Parts Number	Parts Name	Unit Quantity	Set Unit Quantity	Remarks	Price	Maker code
	1	284103	CARBURETOR ASSY	1		Incl.2-18 New gasket required	2472	
	2	263739	CARBURETOR BODY	1			1494	
	3	262991	PURGE BODY	1			400	
	4	262992	COVER	1			174	
	5	261874	PRIMER	1			152	

www.foreroagro.com

Status	Position	Parts Number	Parts Name	Unit Quantity	Set Unit Quantity	Remarks	Price	Maker code
	6	283905	DIAPHRAGM METERRING	1			560	
	7	262993	GASKET	1			134	
	8	262994	DIAPHRAGM	1			212	
	9	282576	GASKET	1			116	
	10	281486	JET	1			256	
	11	261871	O-RING	1			80	
	12	261876	RING	1			38	
	13	261658	SWIVEL	1			140	
	14	261875	SCREW	2			112	
	15	264677	BRACKET	1			267	
	16	261657	PACKING	1			160	
	17	262996	SCREW	4	5		40	
	18	264678	WASHER	1	5		27	
	19	262587	GASKET	1			23	
	20	263987	AIR FILTER BODY ASSY	1		Incl.21-25	336	
	21	263338	AIR FILTER BODY	1			225	
	22	267934	CHOKE	1			120	
	23	263342	STAY	1			74	
	24	263345	PACKING	1	5	7.2x11xt1.3	23	
	25	263942	WASHER	1	5	7.2x12xt0.15	14	
	26	262720	CAP SCREW	2	5	M5x55	40	
	27	262727	SCREEN	1			85	
	28	262643	FOAM ELEMENT	1			116	
	29	277847	COVER ASSY	1		Incl.30-32	223	
	30	277848	CLEANER COVER	1			154	
	31	281438	KNOB	1			54	
	32	261734	SNAP RING	1	5	#5	12	
	33	277812	TANK ASSY	1		Incl.34-44	1745	
	34	277831	FUEL TANK	1			776	
	35	275306	CHEMICAL TANK CAP	1		Incl.38	138	
	36	274875	PACKING	1			76	
	37	261696	BREATHER ASSY	1			263	
	38	262645	PIPE ASSY	1		Incl.39-44	387	
	39	262646	PIPE ASSY	1		Incl.40-42	167	
	40	261115	GROMMET	1			98	
	41	262649	FUEL PIPE	1			45	
	42	263038	RETURN PIPE	1		3x6x85L	36	
	43	267328	FUEL FILTER ASSY	1			218	
	44	261117	CLIP	1			23	
	45	261119	PAD	2			25	
	46	262697	PAD	1			27	
	47	261117	CLIP	1			23	
	48	261352	MARK--LABEL	1		Choke	12	

www.foreroagro.com

5. BC501H-RS
ACCESSORIES

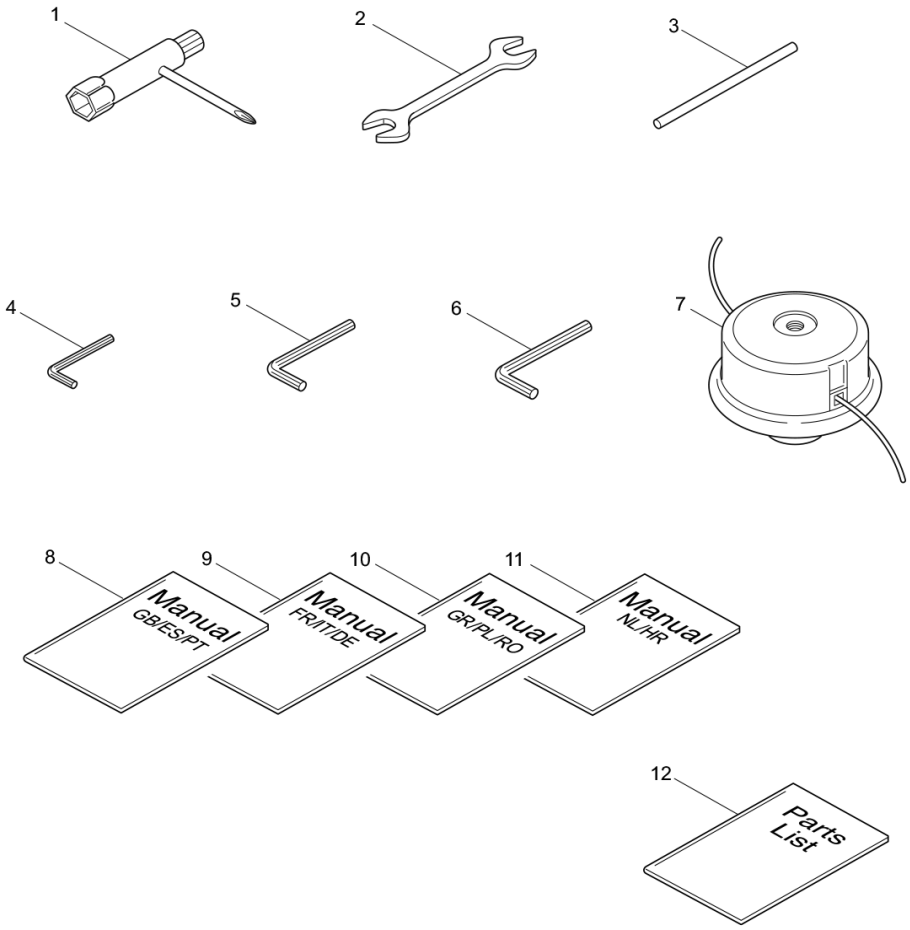

1

Status	Position	Parts Number	Parts Name	Unit Quantity	Set Unit Quantity	Remarks	Price	Maker code
	1	228008	BOX SPANNER	1		17x19x(+)	154	
	2	054756	DOUBLE ENDED SPANNER	1		10x13	47	
	3	212300	LEVER HANDLE	1		6x100L	16	
	4	219431	SPANNER	1		3mm	20	
	5	219432	WRENCH	1		4mm	32	
	6	219433	WRENCH	1		5mm	30	
	7	234860	NYLON HEAD (L)5	1			1034	

www.foreroagro.com

Status	Position	Parts Number	Parts Name	Unit Quantity	Set Unit Quantity	Remarks	Price	Maker code
	8	239863	INSTRUCTION MANUAL	1		GB/ES/PT	10	
	9	239864	INSTRUCTION MANUAL	1		FR/IT/DE	10	
	10	239865	INSTRUCTION MANUAL	1		GR/PL/RO	10	
	11	239866	INSTRUCTION MANUAL	1		NL/HR	10	
	12	524438	PARTS LIST	1		BC501H-RS	10	

www.foreroagro.com