Pièces de rechange
Spare parts list

5000**01**

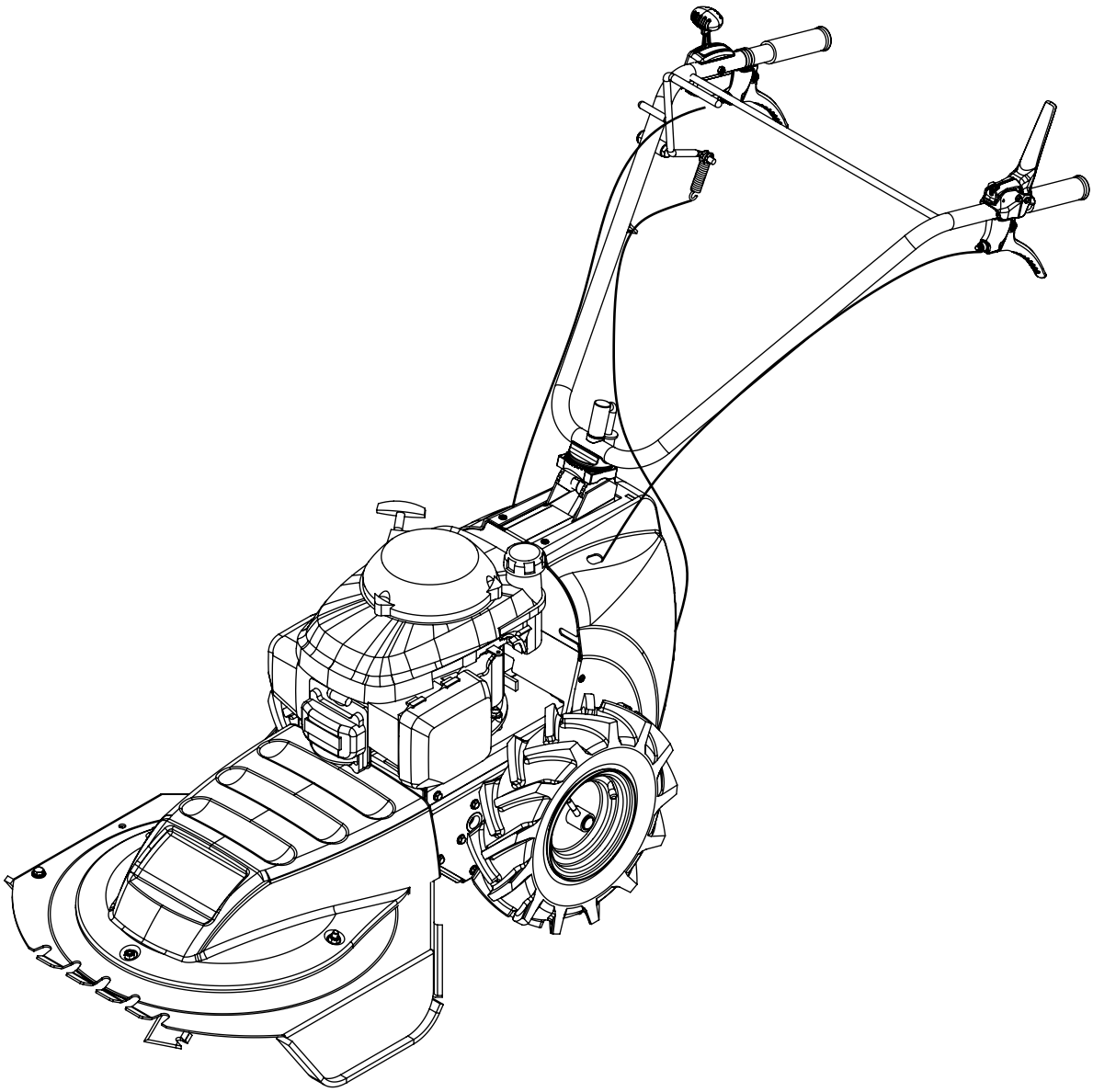

DEBROUSSAILLEUSE
GRASS CUTTER

0501040001_D

01/2015

www.foreroagro.com

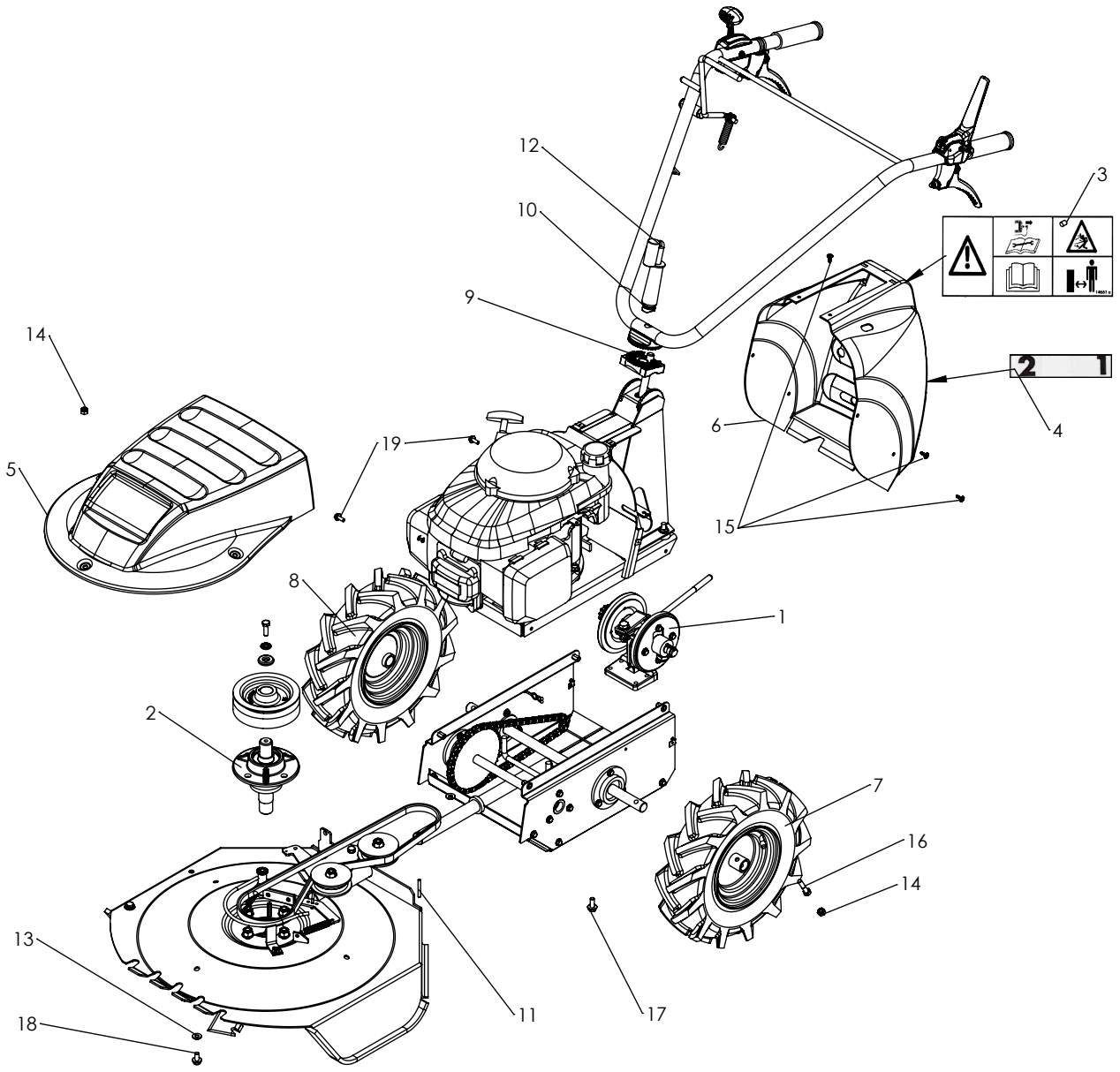

Rep N°	Ref.	Désignation	Description	Qte
1	5001010001	Mécanisme L Junior	Mechanism L Junior	1
2	5001010002	PALIER COUP L Junior	L Junior blade guard bearing	1
3	0503000016	ETIQ "PRECAUTIONS EMPLOI"	"Safety instructions" label	1
4	0503000010	ETIQ "2-1"	Label "2-1"	1
5	0340040016	CAPOT COURROIE xL JUNIORxJAUNE RAL1028x	Yellow RAL 1028 L Junior belt cover	1
5	0340040010	CAPOT COURROIE xL JUNIORxROUGE	Red L Junior belt cover	1
5	0340040008	CAPOT COURROIE xL JUNIORxORANG	Orange L Junior belt cover	1
5	0340040002	CAPOT COURROIE xL JUNIORxBLEUx	Blue L Junior belt cover	1
6	0340040009	CAPOT ARRI xL JUNIOR ROUGE RAL3001	Red RAL 3001 rear cover	1
6	0340040007	CAPOT ARRI xL JUNIOR ORANGE RAL2009	Orange RAL 2009 rear cover	1
6	0340040001	CAPOT ARRI xL JUNIOR BLEU P301	Blue P301 rear cover	1
7	0309000002	ROUE 3.50x6 GAUCHE PNEU 4PR	Left wheel	1
8	0309000001	ROUE 3.50x6 DROITE PNEU 4PR KT804 JANTE 2.50x6 moyeu 30/20	RIGHT WHEEL 3.50x6 TIRE 4PR KT804 RIM 2.50x6 hub 30/20	1
9	0303000007	PIECE INTERMEDIAIRE Avec logem ergot rotation	FILLER PIECE	1
10	0302020037	ENTRETOISE POIGNEE SERRAGE	TIGHTENING LEVER SPACER	1
11	0301020005	GOUPILLE HBK 5x40	Pin Ø5x40 HBK	1
12	0300801401	POIGNEE SERRAGE M14x150 EMBOUT NOIR	HANDLEBAR TIGHTENING LEVER	1
13	0300400802	RONDELLE PLATE M 8X18X1.5 Z NFE 25513	PLATE WASHER M 8X18X1.5 Z NFE 25513	4
14	0300210802	ECROU FREIN M 8 Z DIN 985/8	BLOCKING NUT HM 8 Z DIN 985/8	5
15	0300080405	VIS TOLE TETE POELIER D11 POZI Cr 4.2X16 Z	SCREW POZI 4.2X16Z	6
16	0300010836	VIS H 8x40/22 N CL10.9 DIN931	Screw H M 8x40x22 N CL10.9 DIN931	2
17	0300010816	VIS H 8x20 Z EMB CR	SCREW H M8X20 Z NOTCHED SHOULDER CL 8.8	4
18	0300010815	VIS H 8x16 Z EMB CR DIN 6921 CL 6.8	SCREW H M8X16 Z NOTCHED SHOULDER CL 6.8	3
19	0300010609	VIS H 6x16 Z EMB CR DIN 6921	SCREW HM 6X16 Z NOTCHED SHOULD	4

www.foreroagro.com

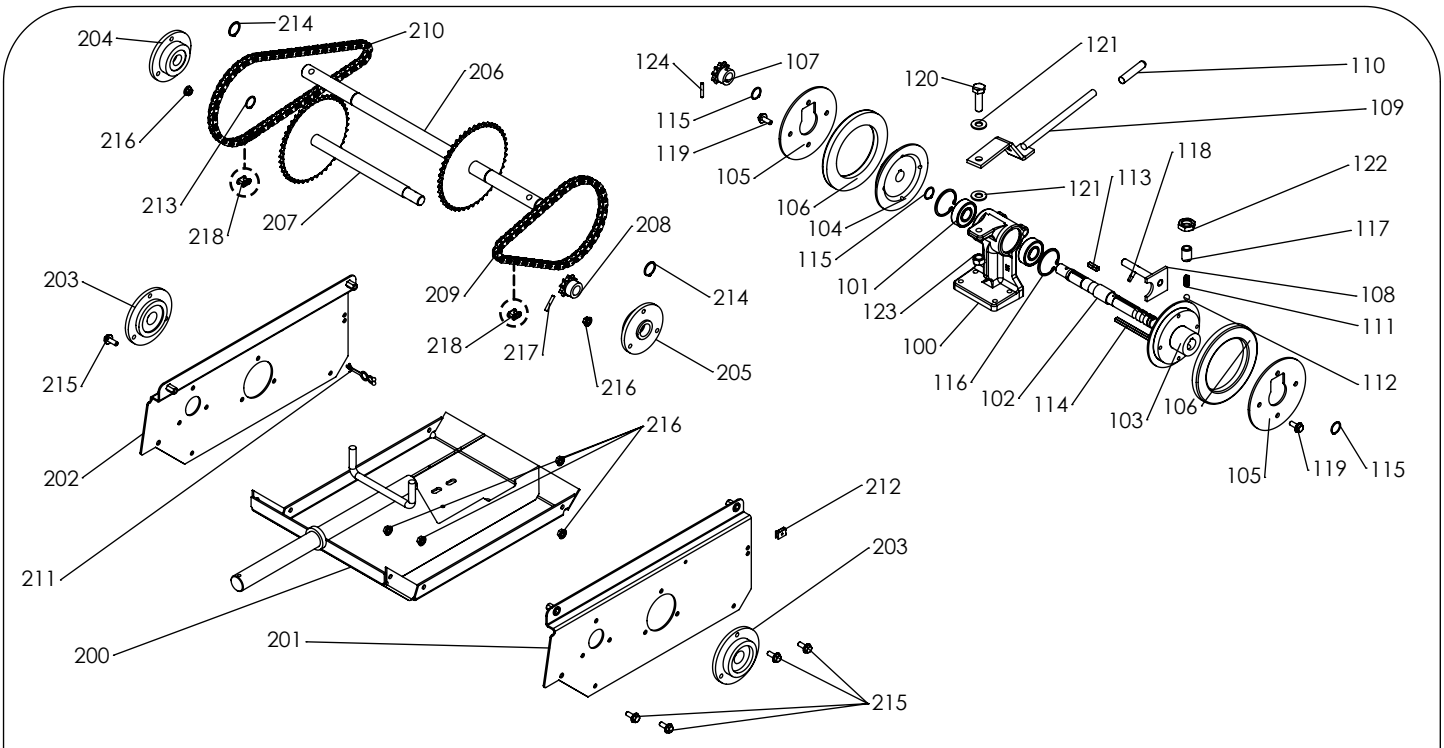

Rep N°	Ref.	Désignation	Description	Qte
100	0302030027	PALIER MECANIS xL JUNIORx	Mechanism bearings	1
101	0306010013	ROULEMENT 6203 2RS 17X40X12	Ball Bearing 6203 2 RS	2
102	0302010018	Axe de vitesse L Junior	Gear shaft	1
103	0303000005	MOYEU GAUCHE DEBR xL JUNIORx	LHS mechanism hub	1
104	0303000004	MOYEU DROIT DEBR xL JUNIORx	RHS mechanism hub	1
105	5002010102	FLASQUE MECAxL JUN V2xBICHx	Bearing plate	2
106	0341000044	RONDEL FRICTION 125X85X10	Rubber washer	2
107	0306050014	PIGNON 10 DTS 9.52 L JUNIOR	Pinion	1
108	5002010103	FOURCHETTE VITES xLJUNxBICH	Fork	1
109	5002010107	LEVIER VITESSE xL JUNxBICHx	Gear lever	1
110	0341000024	EMBOUT TYPE A -D9 LG 50 NOIR	End piece length: 50	1
111	0305020004	RESSORT CP 7.8x16 16/10 GALVA	Locking spring	1
112	0306010001	BILLE ACIER DIAM 7.94 - 5/16	Steel ball Ø7.94	1
113	0301040002	CLAVETTE 5 X 5 X 18 BTS DROITS TOL h 9 - XC 48	Key 5x5x18	1
114	0301040005	CLAVETTE 5 X 5 X 70 BTS DROITS TOL h 9 - XC 48	Key 5x5x70	1
115	0301070003	CIRCLIP EXTERIEUR 17 DIN471-17	Circlips E 17	3
116	0301070005	CIRCLIP INTERIEUR 40 DIN472-40	Circlips Int Ø40	2
117	0302010043	VIS CREUSE M14	Hollow screw M14	1
118	0302010044	VIS STUB M5	Gear fork stub screw M5	1
119	0300010609	VIS H 6x16 Z EMB CR DIN 6921	SCREW HM 6X16 Z NOTCHED SHOULD	8
120	0300011015	VIS HM10 X 30 Z NFEN24017 CL8.8 FST	Screw HM 10x30z FST	1
121	0300401002	RONDELLE PLATE M 10X22X2 Z NFE 27611	PLATE WASHER M 10X22X2 Z NFE 27611	2
122	0300251401	ECROU H.m 14 (BAS)	Nut Hm 14 z	1
123	0300201002	ECROU H.U. M 10 Z DIN 934	NUT HM 10Z	1
124	0301020002	GOUPILLE HBK 4x24	Cotter-pin 4x24 HBK	1
200	5002010501	CAISSON INFxL JUN V2x Gris (8120)	Lower case cover grey (8120)	1
200	5002013001	CAISSON INFxL JUN V2x Gris RAL7015	Lower case cover grey RAL7015	1
201	5002010503	CAISSON LATER GAUxL JUNIORx Gris (8120)	LHS case cover grey (8120)	1
201	5002013003	CAISSON LATER GAUxL JUNIORxG70 Gris RAL7015	LHS case cover grey RAL7015	2
202	5002010502	CAISSON LATER DRxL JUNIORx Gris (8120)	RHS case cover grey (8120)	1
202	5002013002	CAISSON LATER DRxL JUNIORx Gris RAL7015	RHS case cover gris RAL7015	2
203	0340030013	PALIER ARBRE ROUE DIAM 20	WHEEL FLANGE BEARING Ø20	2
204	0340040012	PALIER ARB INT+6003 xL JUNIORx	Countershaft bearing Ø17	1
205	0340040013	PALIER ARBRE INT + 6202 xL JUNIORx	Countershaft bearing Ø15	1
206	0302010010	ARBRE ROUE xL JUNIOR	Wheel shaft	1
207	0302010005	ARBRE INTERMEDIAIRE L JUNIOR	Countershaft	1
208	0306050014	PIGNON 10 DTS 9.52 L JUNIOR	Pinion	1
209	0306020011	CHAINE ISO 06B-1 pas 9.525mm 57 maillons	Chain ISO 06B-1 pitch 9.525	1
210	0306020013	CHAINE ISO 06B-1 pas 9.525mm 77 maillons	Chain ISO 06B-1 pitch 9.525	1
211	0341000033	LIEN TORSADE SR1728	Twist tie	1
212	0301050001	CLIPS PRESTOLE Z/VIS 4.2 EP 4	CLIPS 4.2	2
213	0301070003	CIRCLIP EXTERIEUR 17 DIN471-17	Circlips E 17	1
214	0301070007	CIRCLIPS EXTERIEUR 20 / 0437	Circlips E 20	2
215	0300010609	VIS H 6x16 Z EMB CR DIN 6921	SCREW HM 6X16 Z NOTCHED SHOULD	18
216	0300260601	ECROU HM 6 ZEMB CR DIN 6923	NUT H M6 Z NOTCHED SHOULDER	18
217	0301020002	GOUPILLE HBK 4x24	Cotter-pin 4x24 HBK	1
218	0306020001	ATTACHE RAPIDE 9.525 N 10..06B	Quick fastener (9.525)	2

www.foreroagro.com

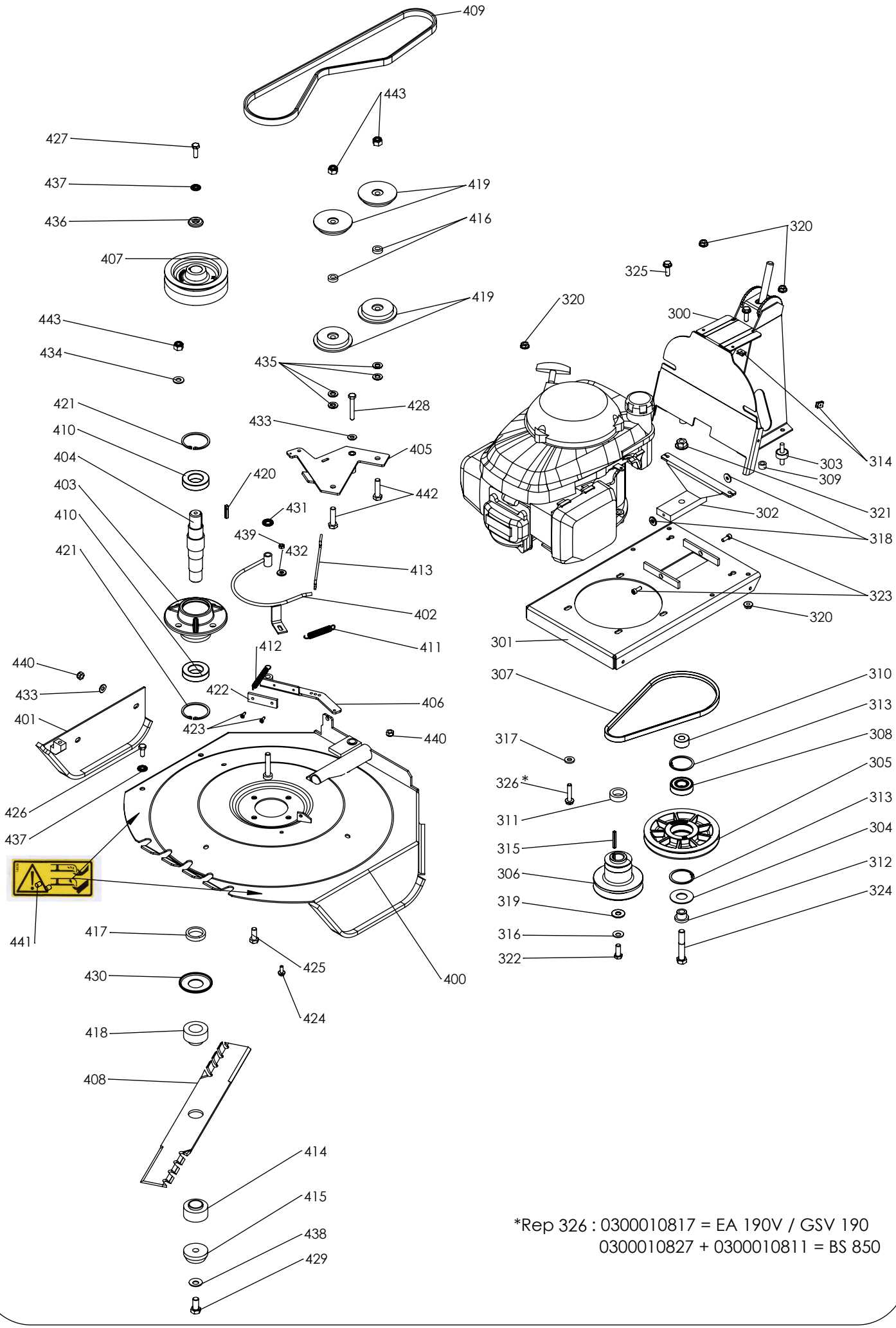

*Rep 326 : 0300010817 = EA 190V / GSV 190
0300010827 + 0300010811 = BS 850

www.foreroagro.com

Rep N°	Ref.	Désignation	Description	Qte
300	5002010508	POTENCE GUIDONxL JUNIOR Gris (8120)	Handlebar bracket grey (8120)	3
300	5002013008	POTENCE GUIDONxL JUNIOR GRIS RAL7015	Handlebar bracket grey RAL7015	1
300	5002010308	POTENCE GUIDONxL JUNIOR NOIR RAL9005	Handlebar bracket Black RAL9005	1
301	5002010504	CAISSON SUPERIEURxL JUNIORx Gris (9120)	Upper plate (grey 8120)	3
301	5002013004	CAISSON SUPERIEURxL JUNIORx Gris RAL7015	Upper plate grey RAL7015	1
302	5002010101	BALANCIER L JUNIOR BICH	Rocker arm	1
303	0341000130	SILENTBLOC D25 H10 MALE M8 60°		2
304	0341000046	RONDELLE FEUTRE 22x48x2	Felt washer 22x48x2	1
305	0306060013	POULIE OSCILLANTE GORGE 13 FIN F GRAPHITE LAMEL	Oscillating pulley	1
306	0306060002	Poulie moteur	Motor pulley	1
307	0306030023	COURROIE 4L 13 X 703	Fanbelt 4L13 x 703	1
308	0306010015	ROULEMENT 6204 2RS	6204 2RS Ball-Bearing	1
309	0302020211	Entretoise dia8.5X10		2
310	0302020025	ENTR. 30x12.2x15 xZNCR3	Spacer 30 x 12,2 x 15	1
311	0302020023	ENTRET. POUL MOTxL JUNxGCVxBIC	Spacer 34,7 x 22,4 x 11	1
312	0302010016	AXE DE POULIE OSCILLANTE	Oscillating pulley axle	1
313	0301070006	CIRCLIP INTERIEUR 47 DIN472-47	Circlips Int. 47	2
314	0301050001	CLIPS PRESTOLE Z/VIS 4.2 EP 4	CLIPS 4.2	4
315	0301040001	CLAVETTE 4.76X4.76X 40 BTS DRO TOL h 9 - XC 48	KEY 4.76X4.76X40 DRO TOL h 9 - XC 48	1
316	0300431001	RONDELLE CONTACT 10 BIC NFE 25-511	Elastic washer 10 Bic	1
317	0300410901	RONDELLE SPECIALE 9X20X3 Z	Washer 9x20x3 Z	4
318	0300410602	RONDELLE SPECIALE 6,3X19 X2,5Z	SPECIAL WASHER 6,3 x 19 x 2,5Z	2
319	0300401001	RONDELLE PLATE M 10X27X2 Z NFE 27611	PLATE WASHER M 10X27X2 Z NFE 27611	1
320	0300260801	ECROU HM 8 ZEMB CR DIN 6923-8	NUT H M8 Z NOTCHED SHOULDER	10
321	0300251202	ECROU HM 12 ZEMB CR DIN 6923	Nut H M12 z notched shoulder	1
322	0300060302	VIS TH 3/8 24 UNF LONG 25 Z	Screw 3/8 TH24 UNF Lg25z	1
323	0300020601	VIS CHC 6 X 16 Z DIN912 ISO4762	Screw CHC M6x16z	2
324	0300011209	VIS H M12x70 Z cl 8.8 ISO4017	Screw HM 12x70z	1
325	0300010838	VIS H 8x25 Z EMB CR DIN 6921 CL 6.8	SCREW H 8x25 Z DIN 6921 NOTCHED SHOULDER CL 6.8	2
326	0300010817	VIS H 8x40 Z EMB CR DIN 6921	SCREW H M8 X 40	4
326	0300010827	VIS HM 8 X 35/22 Z ISO 4014 CL 10.9	Screw HM8x35/22z	2
326	0300010811	VIS H 8 X 60/22 Z CL8.8 DIN931	SCREW HM8 x 60/22 Z CL8.8 DIN931	1
400	5002010506	COUPELLE xL JUN V2xG8120x	Blade guard Grey (8120)	2
400	5002013006	COUPELLE xL JUN V2x Gris RAL7015	Blade guard Grey RAL7015	1
401	5002010505	CARTER DROIT COUPxL JUN V2xGris (8120)	Right cup case (grey 8120)	2
401	5002013005	CARTER DROIT COUPxL JUN V2xGris RAL7015x	Right cup case grey RAL7015	1
402	5002010104	GUIDE COURR COUPExL JUN V2xBIC	Cup belt guide	1
403	0302030025	PALIER COUPELLE xPUB Lx F GRAPHITE SPHEROIDAL GJS 400	Blade guard bearing	1
404	0302010001	ARBRE COUPELLE xL JUN V2x	Blade guard shaft	1
405	5002010105	LEVIER EMBR COUPExL JUN V2xBIC	Blade guard clutch lever	1
406	5002010106	LEVIER FREIN COUPExL JUN V2xBI	Blade brake lever	1
407	0306060012	POULIE COUPELLE L/GT/GTP	Blade guard pulley	1
408	0320020007	LAME LG 521 63.5x5.1 E51 PRO	Blade Ø521	1
409	0306030036	COURROIE LM17 X 1225 PRIMITI	Fanbelt LM B 1225	1
410	0306010008	ROULEMENT 6006 2RS	Bearing 6006	2
411	0305010005	RESSORT TR 12.2x75.2 18/10 GAL BOUCLES A 90 DEGRE	Spring	1
412	0305010001	RESSORT RAPPEL LEV EMB xL JUN	Return spring	1
413	0305000002	TIGE LIAISON LAME/EMBR xL JUN	Lever linkage rod	1
414	0302020033	ENTRETOISE LAME xBICHx L JUN V2	L-shaped blade spacer	1
415	0302020039	ENTRETOISE SERRAGE xZNCR3 x LJUNIOR V2	Blocking washer	1
416	0302020018	ENTR. 20x10.5x6 xGALET EMBR xL JUN V2xB	Spacer 20 x 10,5 x 6	2
417	0302020043	RONDELLE LAME EP8 ZN 16060021	Spacer 40 x 30,5 x 8	1
418	0302020035	ENTR. 50x28x32 xLAME H32xZNCR3	Spacer 50 x 28 x 32	1
419	0340040014	GALET EMBRAYAGE MOULE	Clutch roller	4
420	0301040003	CLAVETTE 5 X 5 X 30 BTS DROITS TOL h 9 - XC 48	Key 5x5x43	1
421	0301070009	CIRCLIPS INTERIEUR 55 DIN472-5	INTERNAL RETAINING RING Ø55	2
422	5504000011	GARNITURE FREIN LAME SEULE	Blade brake lining	1
423	0300090402	VIS AUTOFORMEUSE à tête fraisée DIN7500-ME-Z2-(A2K)-M4	Screw Spriraforme M4x15 K	2
424	0300010609	VIS H 6x16 Z EMB CR DIN 6921	SCREW HM 6X16 Z NOTCHED SHOULD	1
425	0300011008	VIS H 10 X25 Z DIN 933/8/8	SCREW H M10x25 Z	4
426	0300010806	VIS H 8 X 20 Z DIN 933 8/8	Screw HM 8x20 z	1
427	0300090801	VIS A GAUCHE 8X25 Z	Screw H M8x25 z LH	1
428	0300010821	VIS H 8x55/22 Z CL8.8 DIN 931 - ISO 4014	Screw HM 8x55 z 8.8	1
429	0300011211	VIS HM 12x25 N Cl 10.9	Screw HM 12x25 N Cl 10.9	1
430	5504000032	RONDELLE PROTEC ARBRE COUP	Cup shaft protection washer	1
431	0300461001	RONDELLE STARLOCK Ø10	Starlock washer Ø10	1
432	0300410602	RONDELLE SPECIALE 6,3X19 X2,5Z	SPECIAL WASHER 6,3 x 19 x 2,5Z	1
433	0300400802	RONDELLE PLATE M 8X18X1.5 Z NFE 25513	PLATE WASHER M 8X18X1.5 Z NFE 25513	2
434	0300401002	RONDELLE PLATE M 10X22X2 Z NFE 27611	PLATE WASHER M 10X22X2 Z NFE 27611	8
435	0300401003	RONDELLE PLATE M 10X20X2 Z NFE 27611	Washer M 10x20x2z	4
436	0300411101	RONDELLE SPECIALE 11X30X5 Z	Washer 11x30x5z	1
437	0300430801	RONDELLE CONTACT M8 NF E 25511	CONTACT WASHER 8	2
438	0300431201	RONDELLE CONTACT 12 NFE 25-511	Elastic washer 12 Bic	1
439	0300210602	ECROU FREIN M 6 Z DIN 985-8	BLOCKING NUT M 6 Z	1
440	0300210802	ECROU FREIN M 8 Z DIN 985/8	BLOCKING NUT HM 8 Z DIN 985/8	2
441	0503000006	AUTO-COLLANT DANGER LAME 78 X	Label "danger sticker"	2
442	0300011004	VIS H 10 X 40 Z NFEN 24017	SCREW HM 10X40Z NFEN 24017	2
443	0300211001	ECROU FREIN M 10 Z DIN 985/8	BLOCKING NUT M 10 Z	6

www.foreroagro.com

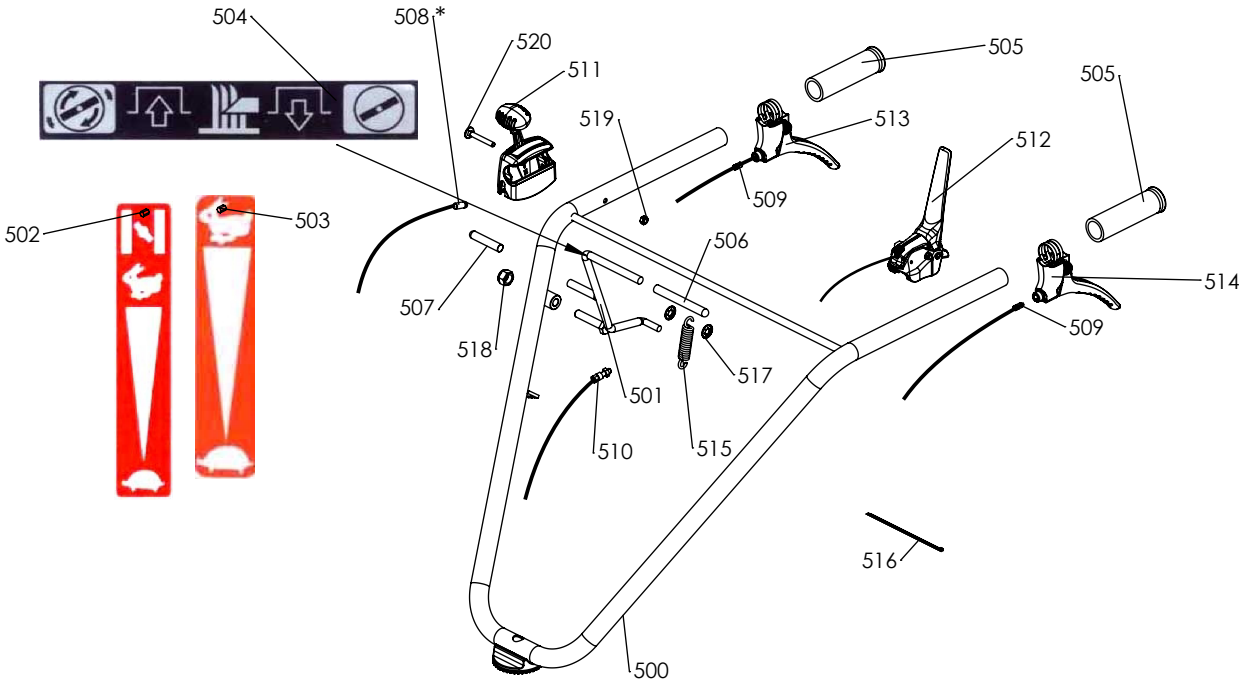

* Rep 508 : 0308040054 = BS 850
0308040052 = GSV 190

Rep N°	Ref.	Désignation	Description	Qte
500	5002010307	GUIDONxL JUNIOR xNoirx	Handlebar (black)	2
500	5002010507	GUIDONxL JUNIORxG8120x	Handlebar (grey 8120)	1
501	5002010108	Manette embrayage de lame	Clutch lever	1
502	0503000044	ETIQ. GAZ HONDA GCV135/160 UM516 C	Label throttle control GCV	1
503	0503000043	ETIQ. GAZ (SS STOP)VERS PNEUM DIM 42X11	Label throttle control without stop	1
504	0503000023	ETIQ EMBR LAME	Forward gear clutch label	1
505	0341000037	POIGNEE PLASTIQUE DIAM 25 CB	HAND SIDE GRIP	2
506	0341000025	EMBOUT TYPE A - D9 LG 90 NOIR	End piece length: 90	1
507	0341000024	EMBOUT TYPE A -D9 LG 50 NOIR	End piece length: 50	1
508	0308040054	CABLE GAZ x1350 xLF60 Z0° MANETTE LGC	Throttle cable Lg 1350mm S60	1
508	0308040052	CABLE GAZ x1250 xLF60 Z0° MANETTE LGC	Throttle cable Lg 1250mm stroke 60mm	1
509	0308020061	Câble d' embr Mav Mar L J / L S LAB	Clutch cable	2
510	0308020015	CABLE EMBR LAME L JUN V2 LIVRE AVEC AXE D6x17.5 + CLIPS	Blade clutch cable	1
511	0307020023	MANETTE GAZ LGC POMMEAU NOIR RAL9005	THROTTLE LEVER LGC BLACK KNOB RAL9005	1
512	0307010046	LEVIER COUPE CIRCUIT MOTEUR LASM Ø25 LJ SUBARU	CUT OFF ENGINE LEVER LASM Ø25 LJ SUBARU	1
512	0307010045	LEVIER COUPE CIRCUIT MOTEUR LASM Ø25 LJ BS	CUT OFF ENGINE LEVER LASM Ø25 LJ BS	1
512	0307010044	LEVIER COUPE CIRCUIT MOTEUR LASM Ø25 LJ HONDA	CUT OFF ENGINE LEVER LASM Ø25 LJ HONDA	1
513	0307010041	Levier LABC7B01.MR Ø25 course 25 + Tempo .Mar	lever LAB Ø25 stroke 25	1
514	0307010040	Levier LABC7B01.MA Ø25 course 25 + Tempo .Mav	lever LAB Ø25 stroke 25	1
515	0305010010	RESSORT TR15x75 30/10	Locking spring	1
516	0301060003	COLLIER POLYAM.3.6 X 140 NOIR	COLLAR	2
517	0300460801	RONDELLE STARLOCK DIA 8	STARLOCK WASHER DIA 8	2
518	0300211201	ECROU FREIN M 12 Z DIN 985/8	BLOCKING NUT M 12 Z	1
519	0300210602	ECROU FREIN M 6 Z DIN 985-8	BLOCKING NUT M 6 Z	1
520	0300080610	VIS TRCC 6 X 45/20 Z Din603	SCREW TRCC 6 X 45 Z	1

www.foreroagro.com